.....4

.....7

.....8

.....8

..... 8

.....8

.....9

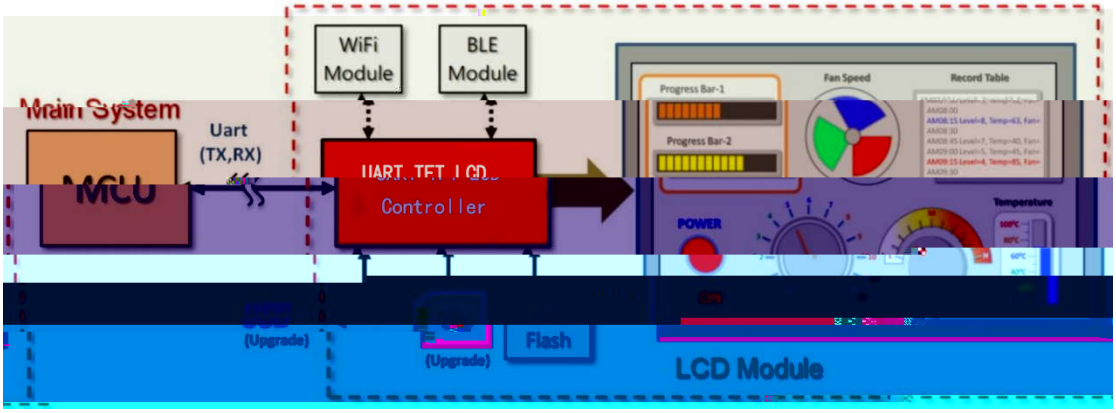
WiFi Module
BLE Module
Main System
Uart (TX,RX)
MCU
Controller
Progress Bar-1
Progress Bar-2
Fan Speed
Record Table
POWER
Temperature
(Upgrade)
(Upgrade)
Flash
LCD Module

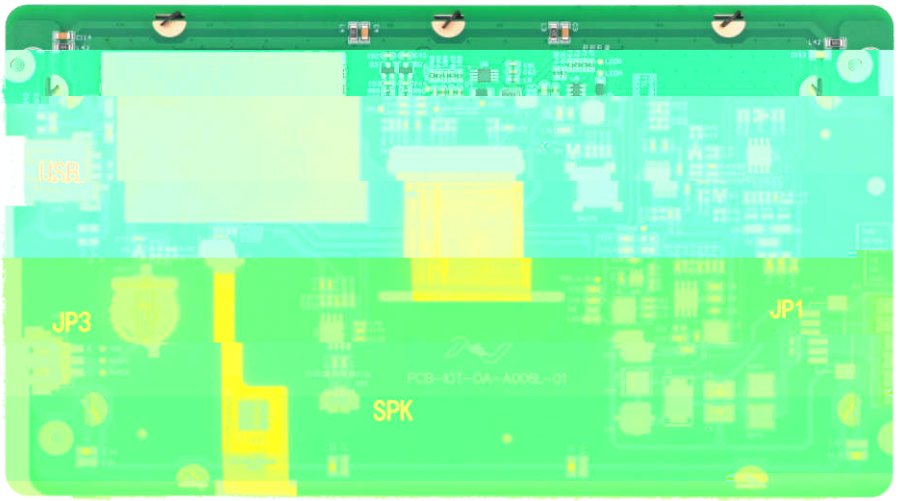
USB
JP3
JP1
SPK

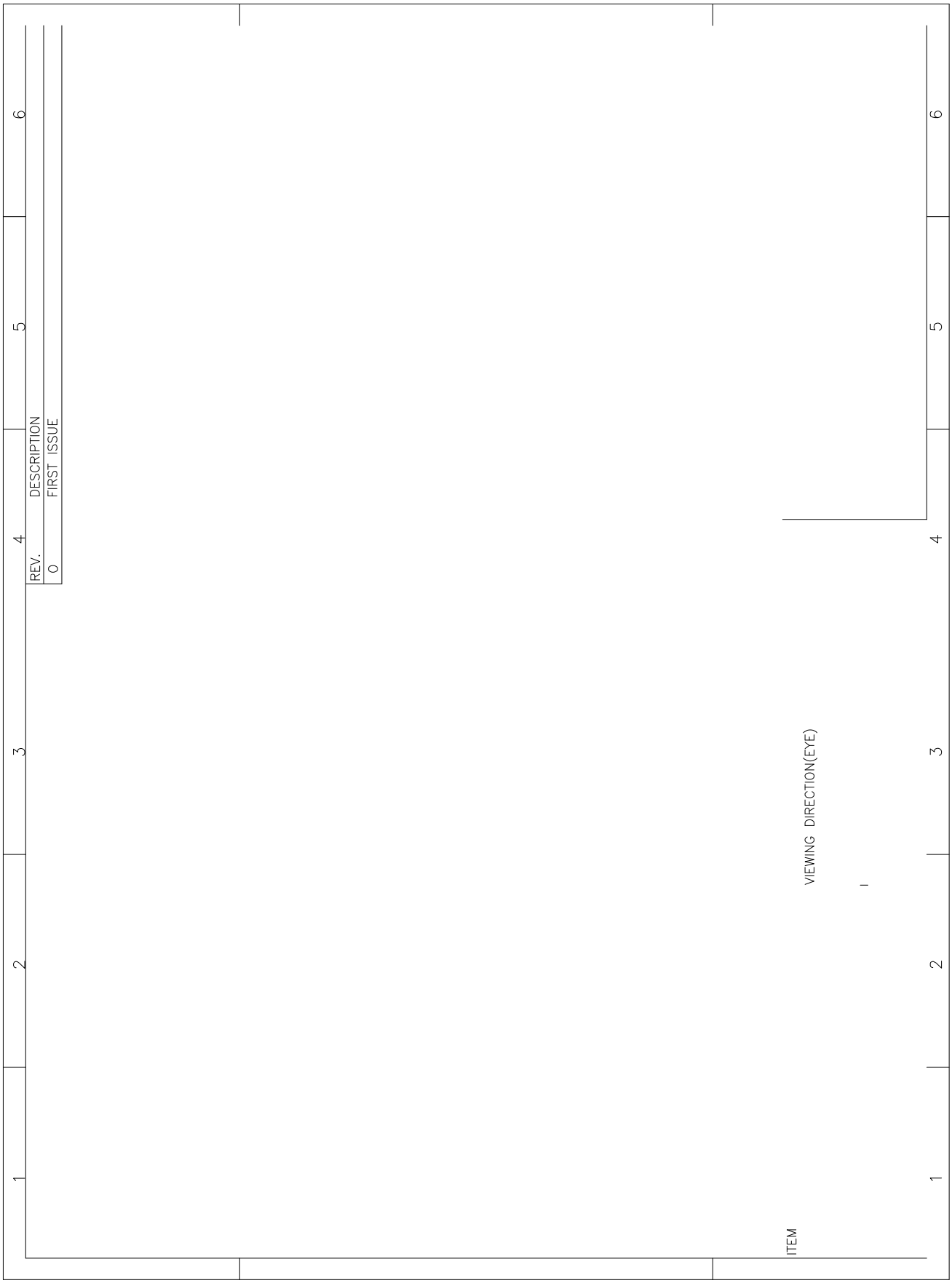
REV.
DESCRIPTION
0
FIRST ISSUE
VIEWING DIRECTION(EYE)
ITEM